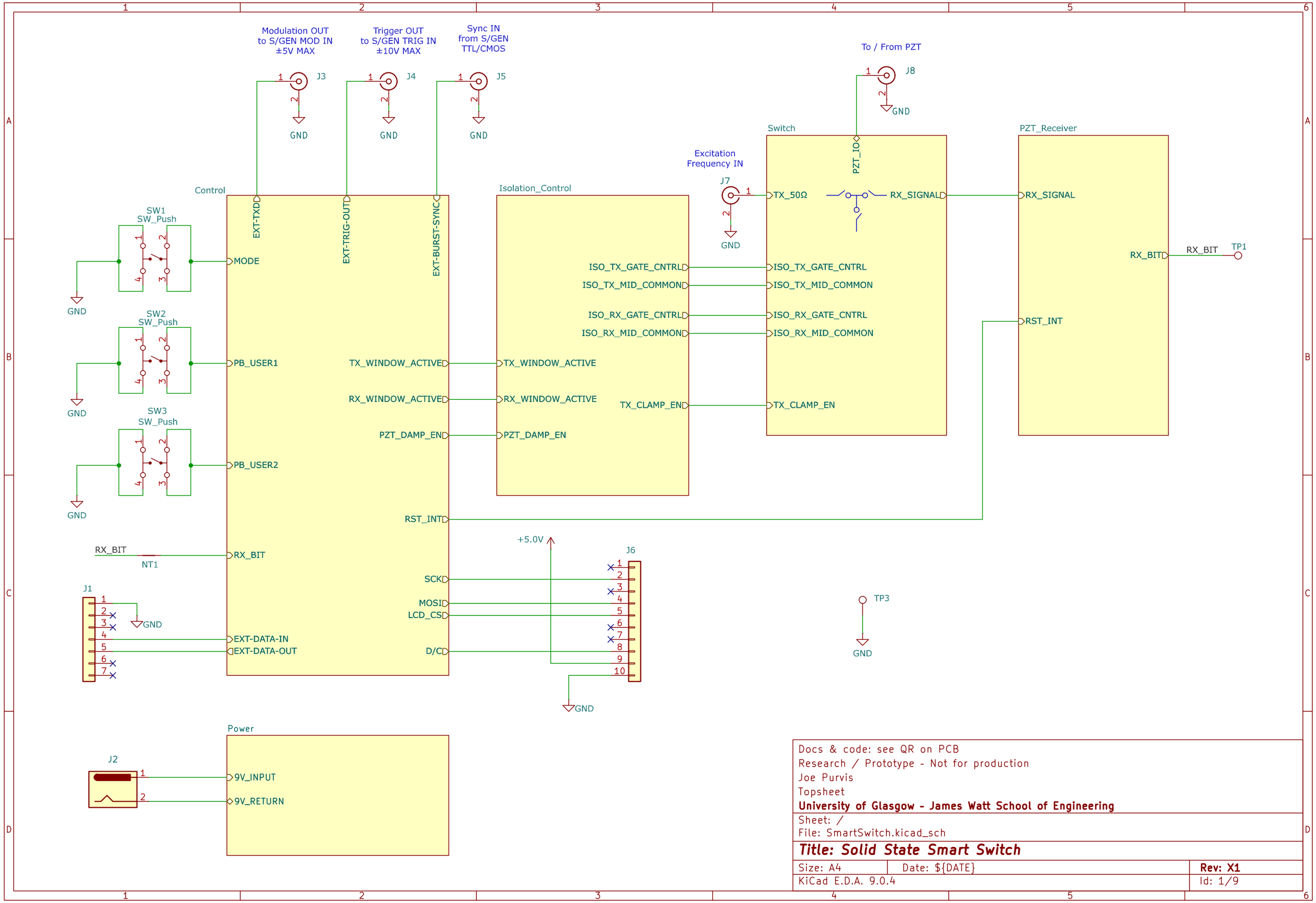

Docs & code: see QR on PCB
Research / Prototype - Not for production
Joe Purvis
Topsheet
University of Glasgow - James Watt School of Engineering

Sheet: /
File: SmartSwitch.kicad_sch

Title: Solid State Smart Switch

Size: A4	Date: ${DATE}	**Rev: X1**
KiCad E.D.A. 9.0.4		Id: 1/9

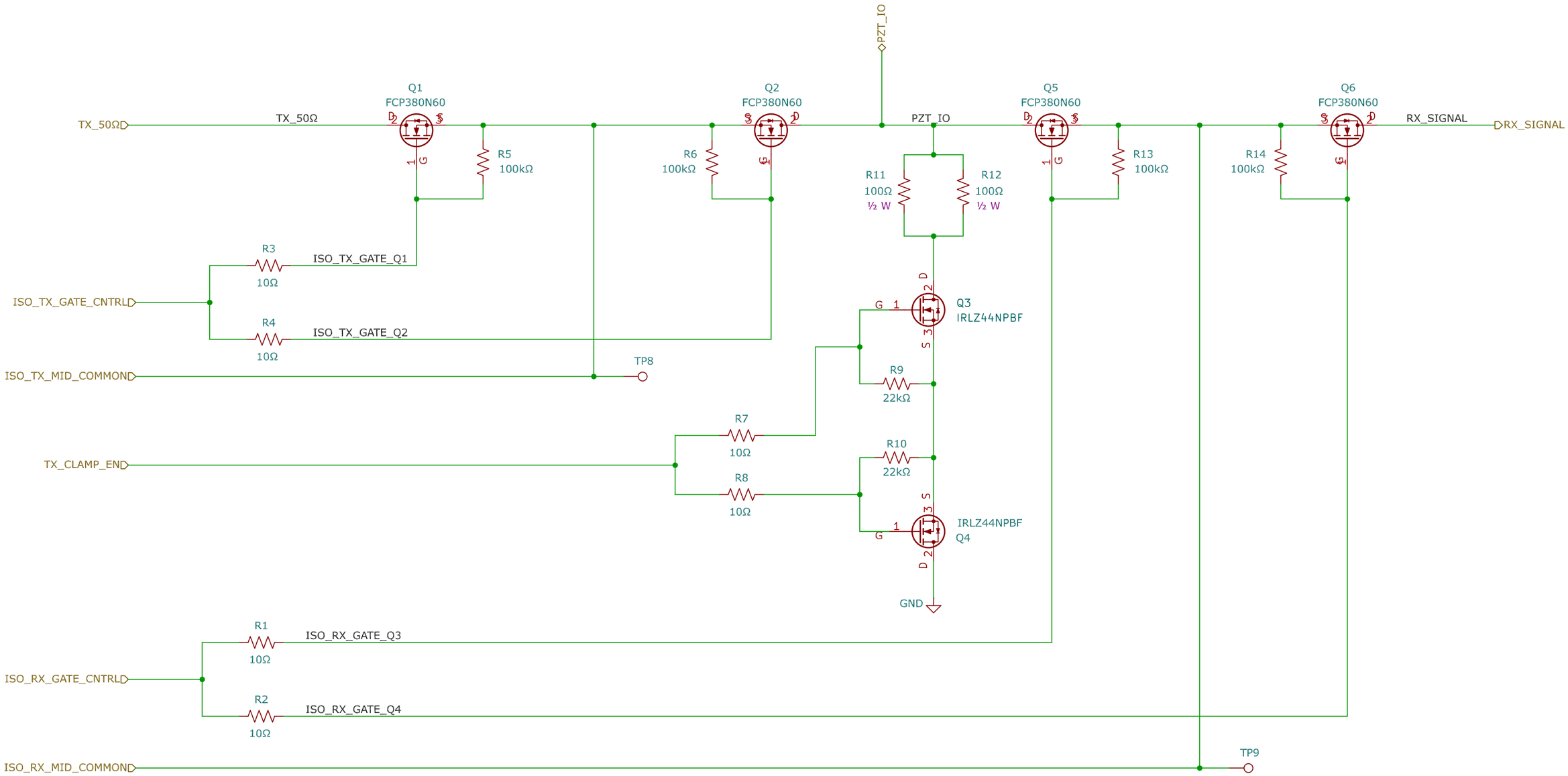

Docs & code: see QR on PCB
Research / Prototype - Not for production
Joe Purvis

University of Glasgow - James Watt School of Engineering

Sheet: /Switch/
File: Switch.kicad_sch

Title: Solid State Smart Switch

Size: A4	Date: ${DATE}	**Rev: X1**
KiCad E.D.A. 9.0.4		Id: 2/9

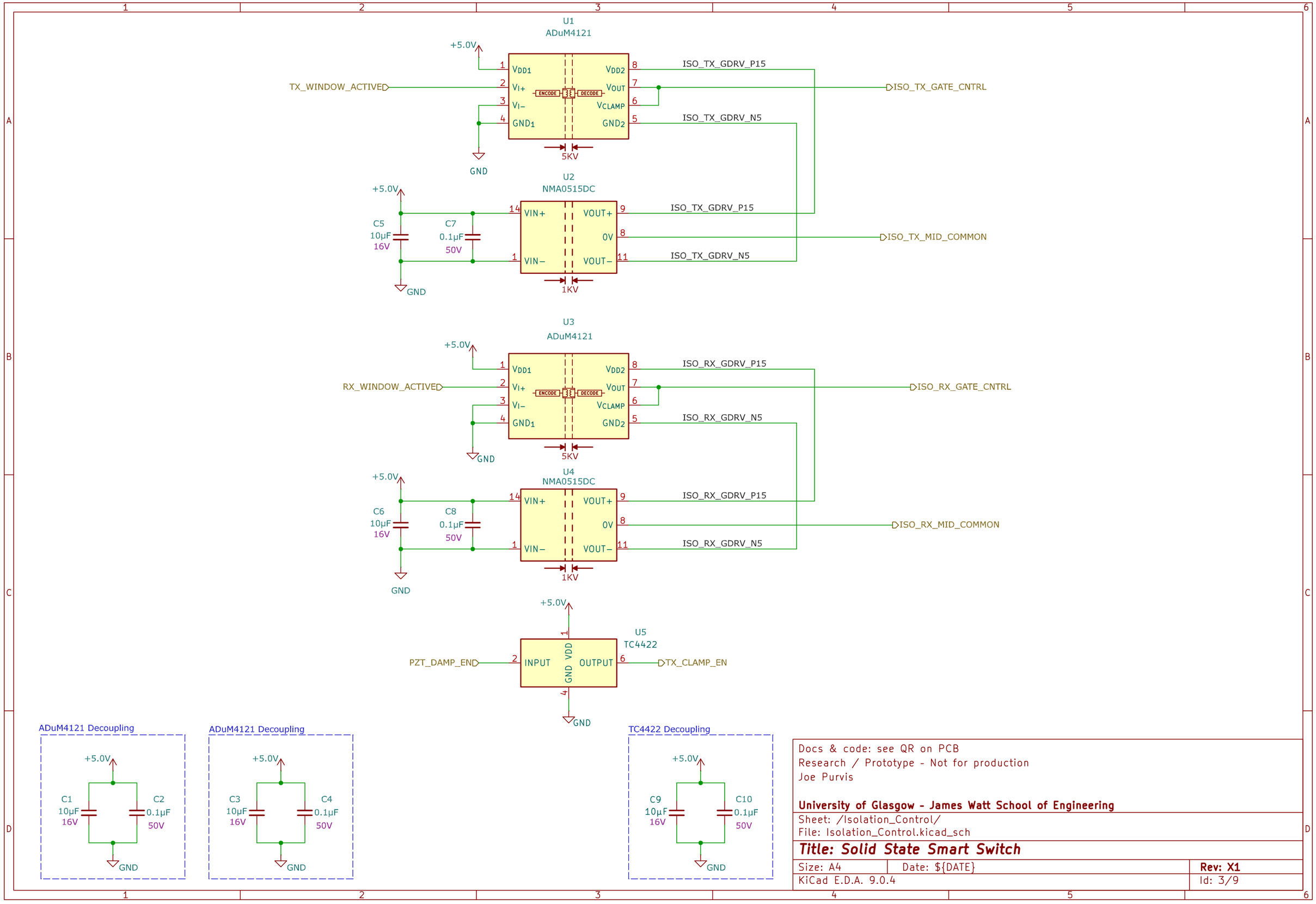

Docs & code: see QR on PCB
Research / Prototype - Not for production
Joe Purvis

University of Glasgow - James Watt School of Engineering

Sheet: /Isolation_Control/
File: Isolation_Control.kicad_sch

Title: Solid State Smart Switch

Size: A4	Date: ${DATE}	**Rev: X1**
KiCad E.D.A. 9.0.4		Id: 3/9

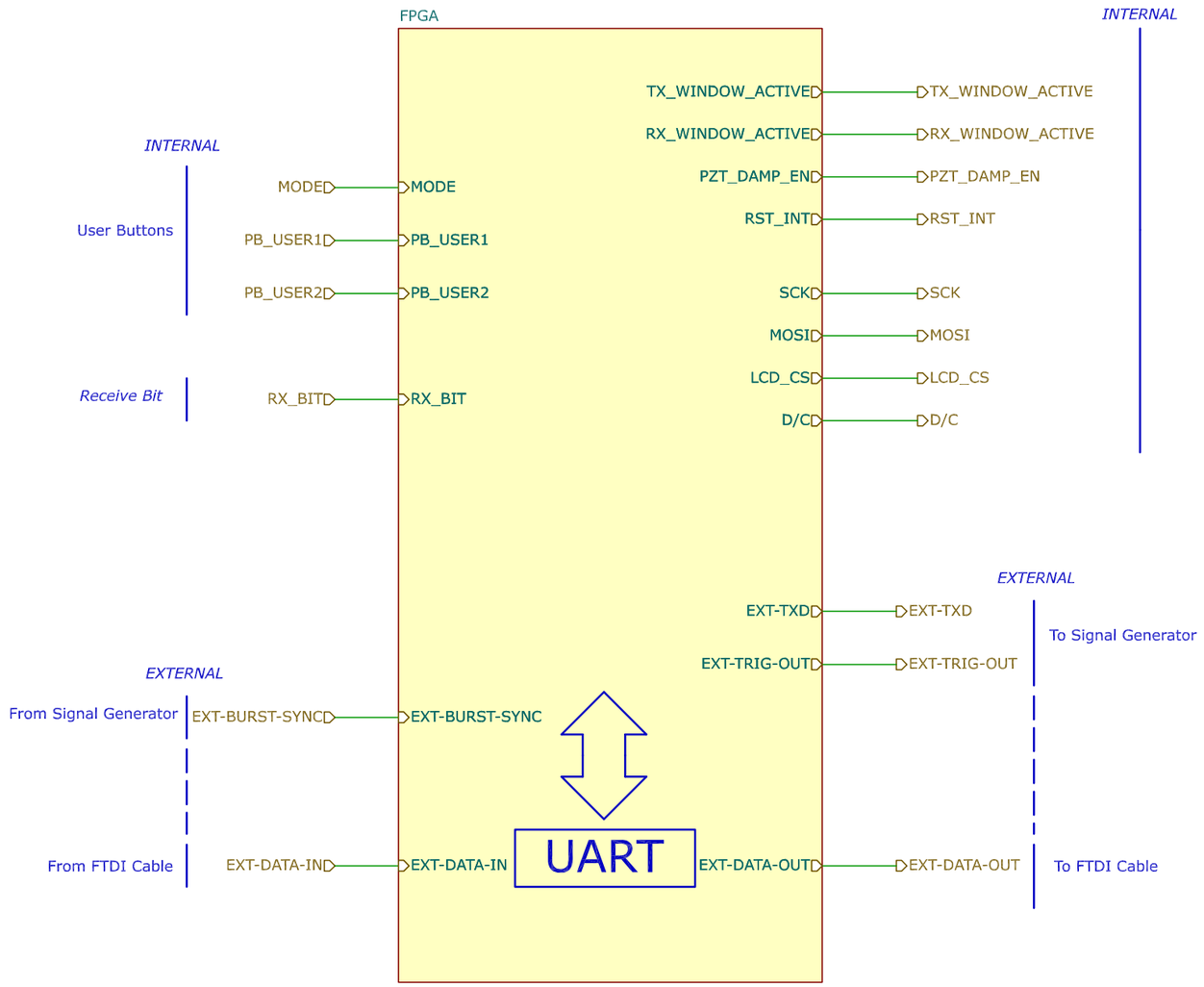

Docs & code: see QR on PCB
Research / Prototype - Not for production
Joe Purvis

University of Glasgow - James Watt School of Engineering

Sheet: /Control/
File: Control.kicad_sch

Title: Solid State Smart Switch

Size: A4	Date: ${DATE}	**Rev: X1**
KiCad E.D.A. 9.0.4		Id: 4/9

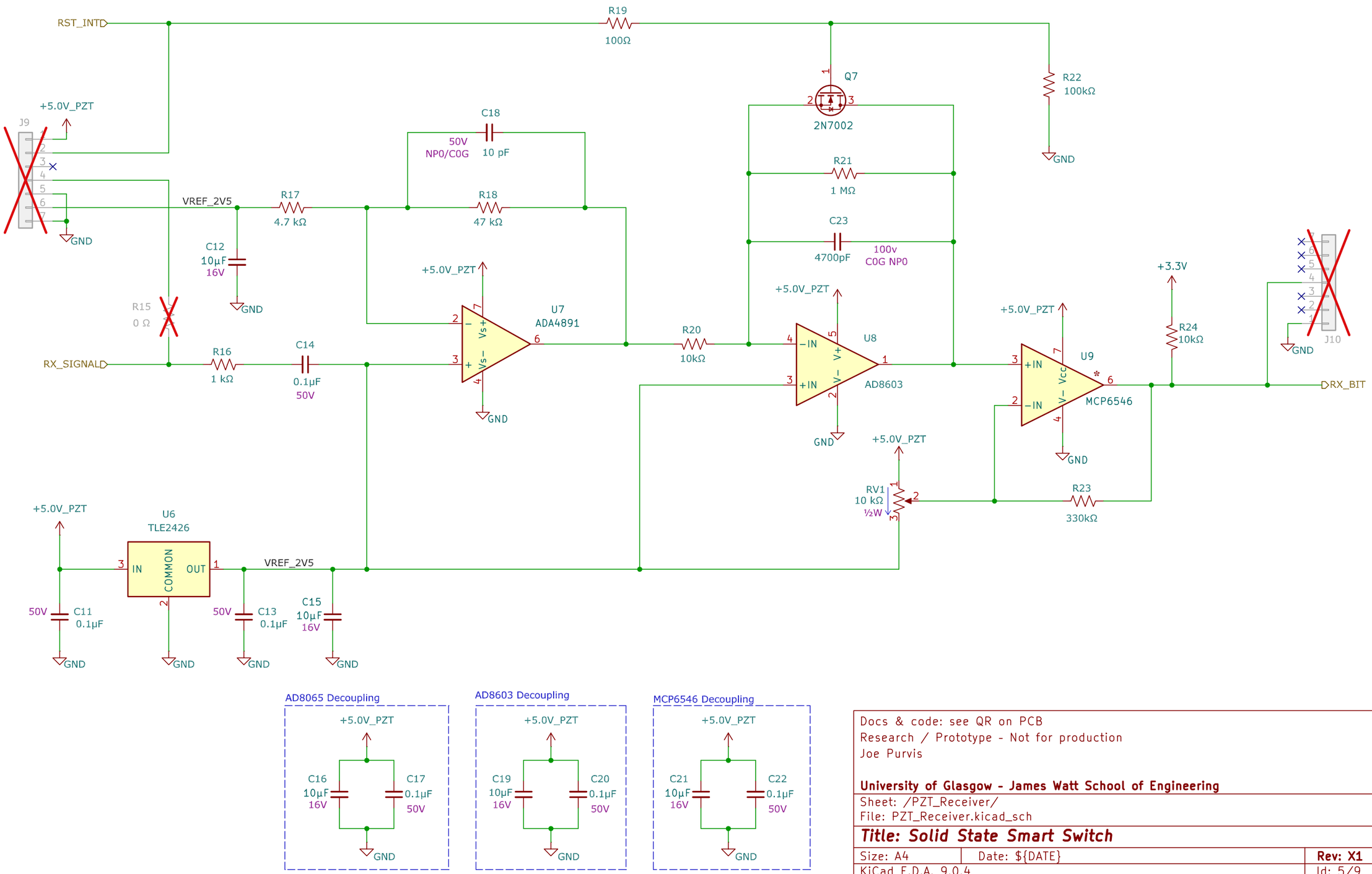

Docs & code: see QR on PCB
Research / Prototype - Not for production
Joe Purvis

University of Glasgow - James Watt School of Engineering

Sheet: /PZT_Receiver/
File: PZT_Receiver.kicad_sch

Title: Solid State Smart Switch

Size: A4	Date: ${DATE}	**Rev: X1**
KiCad E.D.A. 9.0.4		Id: 5/9

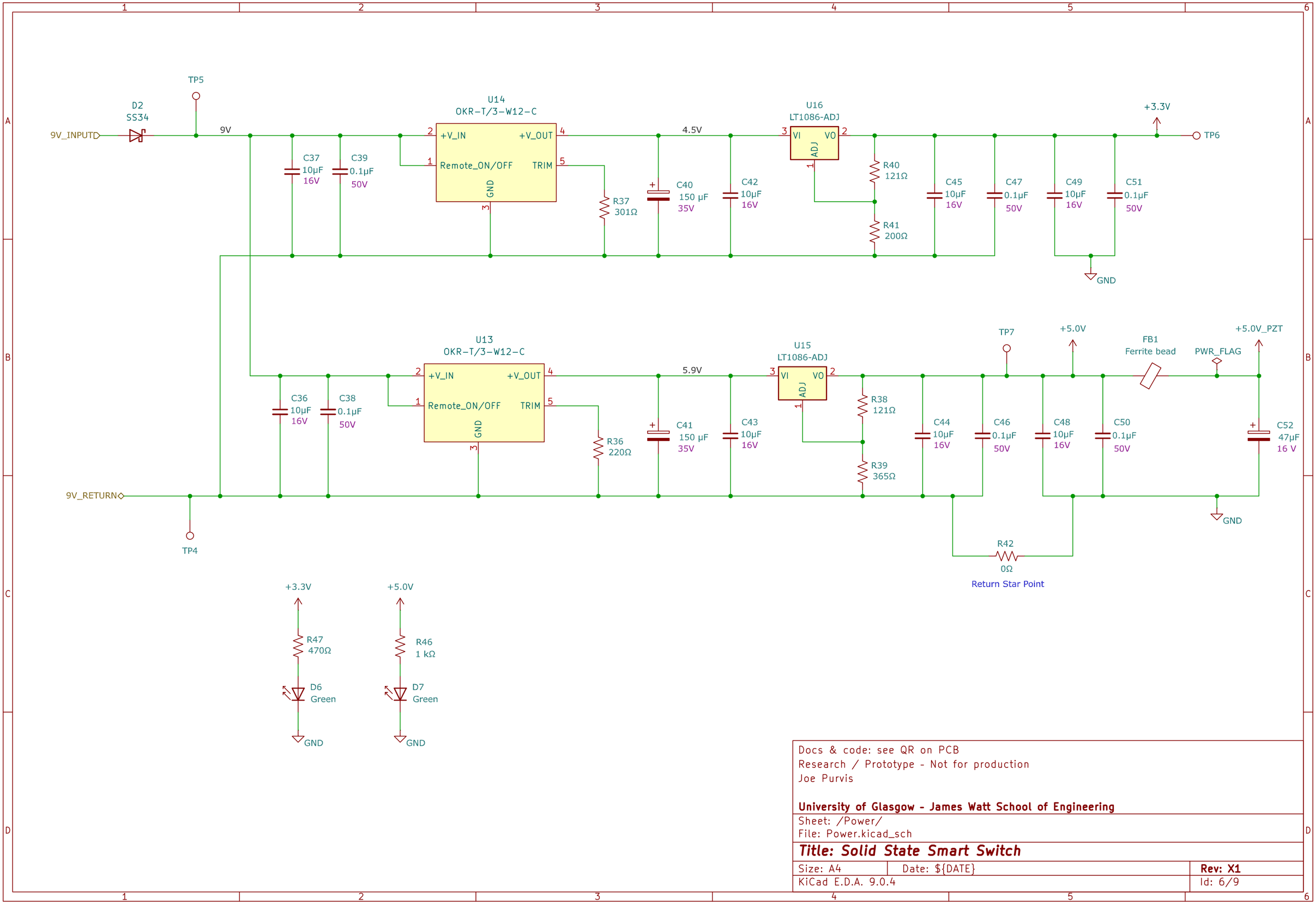

Docs & code: see QR on PCB
Research / Prototype - Not for production
Joe Purvis

University of Glasgow - James Watt School of Engineering

Sheet: /Power/
File: Power.kicad_sch

Title: Solid State Smart Switch

Size: A4	Date: ${DATE}	**Rev: X1**
KiCad E.D.A. 9.0.4		Id: 6/9

Programming Note:-

If you are re-programming the UPduino in situ via the J1 micro USB connector use a USB cable/adapter where the +5 V (VBUS) conductor is disconnected, but D+, D− & GND remain.

Powering the UPduino from the SmartSwitch's 5 V will ensure no +5v contention with the USB's own 5v supply.

If a regular USB cable is used Diode D5 will provide protection to the SmartSwitch's +5v but it will not protect the PC's USB port.

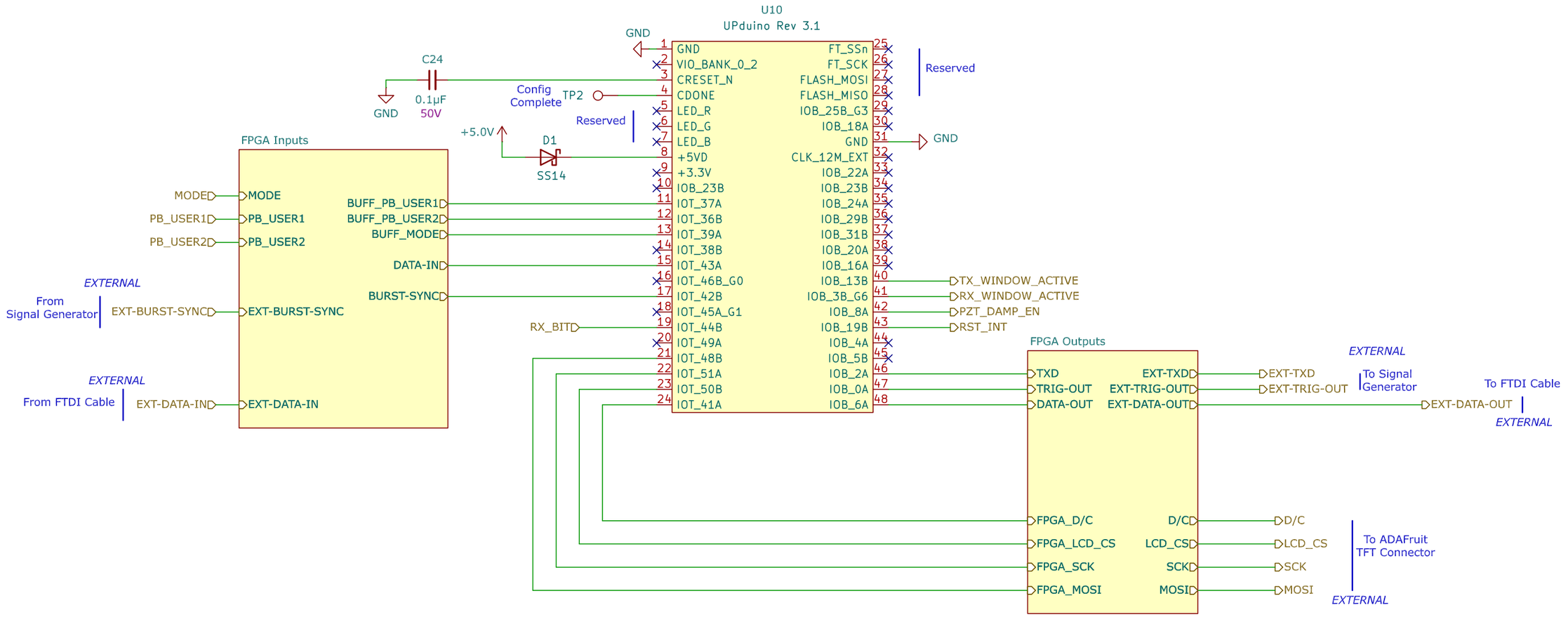

Docs & code: see QR on PCB
Research / Prototype - Not for production
Joe Purvis

University of Glasgow - James Watt School of Engineering

Sheet: /Control/FPGA/
File: FPGA.kicad_sch

Title: Solid State Smart Switch

Size: A4	Date: ${DATE}	**Rev: X1**
KiCad E.D.A. 9.0.4		Id: 7/9

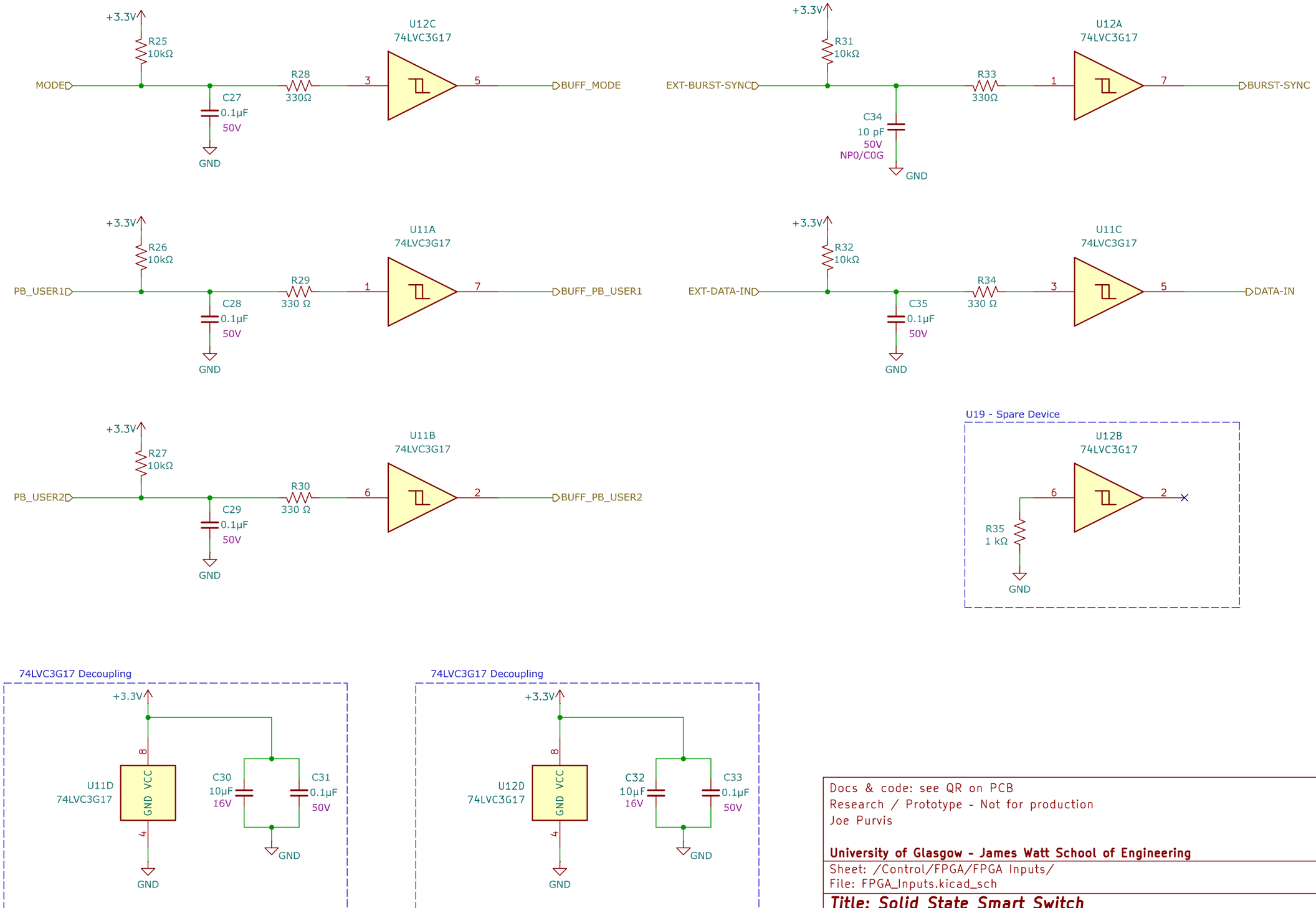

Docs & code: see QR on PCB
Research / Prototype - Not for production
Joe Purvis

University of Glasgow - James Watt School of Engineering

Sheet: /Control/FPGA/FPGA Inputs/
File: FPGA_Inputs.kicad_sch

Title: Solid State Smart Switch

Size: A4	Date: ${DATE}	**Rev: X1**
KiCad E.D.A. 9.0.4		Id: 8/9

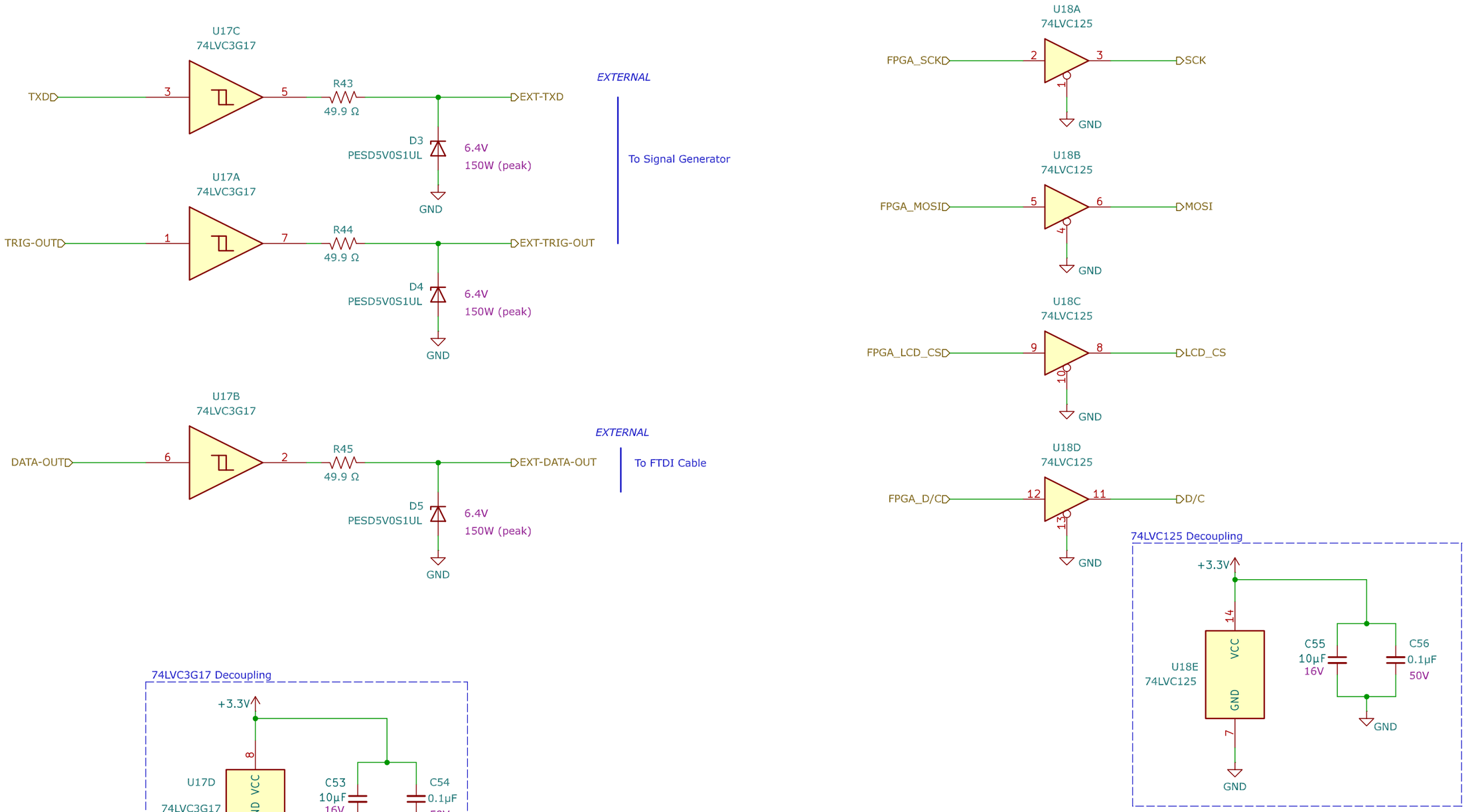

Docs & code: see QR on PCB
Research / Prototype - Not for production
Joe Purvis

University of Glasgow - James Watt School of Engineering

Sheet: /Control/FPGA/FPGA Outputs/
File: FPGA_Outputs.kicad_sch

Title: Solid State Smart Switch

Size: A4	Date: ${DATE}	**Rev: X1**
KiCad E.D.A. 9.0.4		Id: 9/9